Tagra | SSC16 | LED Profile End Caps | Black | 4 Pack

1616-ENDCAP/BLK / ITM000742

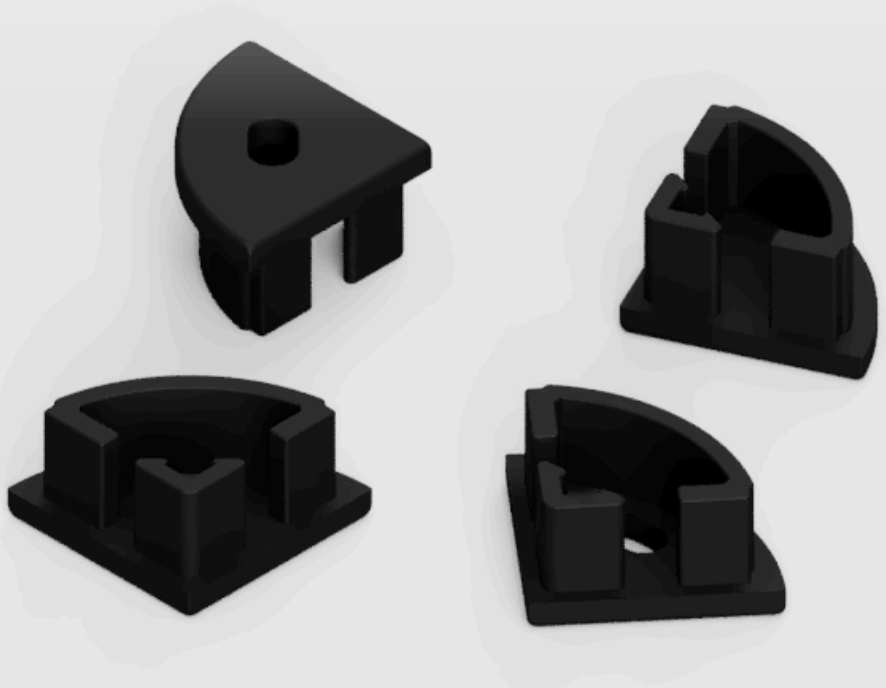

Datasheet

06-10-2026

www.tagra-lighting.co.uk

support@tagra-lighting.co.uk

Tagra | SSC16 | LED Profile End Caps | Black | 4 Pack



Colour	Material	Pack Size	Warranty
Black	Plastic	4 PCS	5 Years

SKU: 1616-ENDCAP/BLK
ITM: ITM000742

Key Features:

- **Body Colour:** Black
- **Warranty:** 5 Years
- **Dimensions (W x H x L):** 16 x 8 x 16mm

Mechanical Data			
Body Colour:	Black	**Entry Cable Direction:**	Top
Product Weight:	4g	**Dimensions (LxWxH):**	16 x 16 x 8mm

Environmental Data			
Body Material:	Plastic	**Ingress Protection (IP):**	IP20

Dimension Drawing

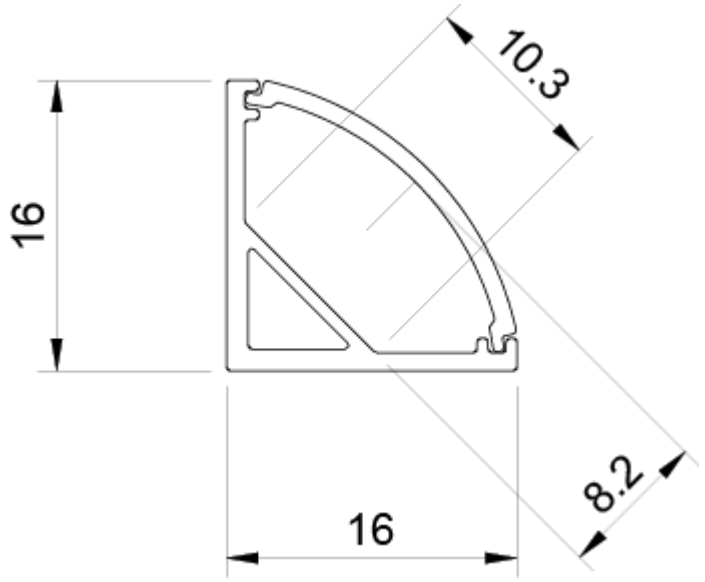

Packaging Data

Items / Sets Per Pack:	4	**Packaging Height:**	8mm
Packaging Length:	16mm	**Packaging Width:**	16mm
Packaging Weight:	4g		

Disclaimer

Tagra Lighting have taken reasonable care to ensure that the information in this datasheet is accurate at time of publication however it should be noted that all specifications are subject to tolerance. Descriptive specifications such as colour are subjective. Tagra Lighting reserve the right to update specifications without notice. The information in the datasheet may only be relied on by customers of Tagra Lighting in accordance with applicable terms and conditions.

Tagra Lighting is a trading name of T.R Ventures Limited, a company incorporated in England with registered number 07757720. Our registered office is Unit 2, Southfield Industrial Estate, Trafford Park, M17 1SJ.

www.tagra-lighting.co.uk

support@tagra-lighting.co.uk